US006536365B1

(12) **United States Patent**
Horton

(10) **Patent No.: US 6,536,365 B1**
(45) **Date of Patent: Mar. 25, 2003**

(54) **SHOCK-MITIGATING NOSE FOR UNDERWATER VEHICLES**

(75) Inventor: **Duane M. Horton**, Portsmouth, RI (US)

(73) Assignee: **The United States of America as represented by the Secretary of the Navy**, Washington, DC (US)

(*) Notice: Subject to any disclaimer, the term of this patent is extended or adjusted under 35 U.S.C. 154(b) by 0 days.

(21) Appl. No.: **10/066,490**

(22) Filed: **Feb. 1, 2002**

(51) **Int. Cl.**[7] **B63B 21/66**

(52) **U.S. Cl.** **114/244**; 114/20.1; 114/238; 114/316; 114/317; 114/318; 114/319; 114/320; 114/249; 114/254; 114/253; 43/41; 43/42.22; 43/42.24; 43/42.35; 43/42.48

(58) **Field of Search** 114/20.1, 238, 114/316, 317, 318, 319, 320, 244, 249, 254, 253; 43/41, 42.22, 42.24, 42.35, 42.48

(56) **References Cited**

U.S. PATENT DOCUMENTS

1,130,585	A	*	3/1915	Durr	114/20.1
1,292,618	A	*	1/1919	Lazelle	446/159
2,164,340	A	*	7/1939	Morgan et al.	102/334
2,371,404	A	*	3/1945	Mumford	114/244
2,439,123	A	*	4/1948	Bell	43/41
3,054,618	A	*	9/1962	Abrams et al.	102/422
3,180,225	A	*	4/1965	Draim	102/399
3,279,405	A	*	10/1966	Billmeyer	102/390
3,372,662	A	*	3/1968	Nisewanger	114/20.1
3,648,643	A	*	3/1972	Murray	114/382
3,805,729	A	*	4/1974	Golay et al.	114/244
3,916,556	A	*	11/1975	Armanno	43/42.06
4,549,464	A	*	10/1985	Hawkins et al.	102/293
4,593,637	A	*	6/1986	Klee	102/293
4,649,744	A	*	3/1987	Cotillier	73/170.34
4,686,927	A	*	8/1987	Hawkes et al.	104/173.1
4,918,854	A	*	4/1990	Webre, Jr.	43/42.31
5,050,525	A	*	9/1991	Lee et al.	114/244
5,092,222	A	*	3/1992	Lynch	89/1.809
5,235,928	A	*	8/1993	Shank, Jr.	114/244
5,276,992	A	*	1/1994	Kato	43/42.06
5,983,821	A	*	11/1999	Williams	114/244
6,146,114	A	*	11/2000	Nardacci et al.	417/437

FOREIGN PATENT DOCUMENTS

DE	003931825 A1	*	6/1993
GB	2010764 A	*	7/1979
WO	WO 81/00186	*	2/1981

* cited by examiner

Primary Examiner—Michael J. Carone
Assistant Examiner—John Richardson
(74) *Attorney, Agent, or Firm*—James M. Kasischke; Michael F. Oglo; Jean-Paul Nasser

(57) **ABSTRACT**

A flexible nose assembly for an underwater vehicle provides increased energy-absorbing capabilities and facilitates recovery and handling of the vehicle. The flexible nose assembly includes a flexible nose cap, at least one retrieval device, and at least one cable that is strong in tension, yet weak in compression which is coupled between the retrieval device and the UUV body. The flexible nose cap has a gap formed therein allowing the communication of environmental water into the region between the vehicle body and the nose cap. Optionally, the retrieval device may be recessed into the flexible nose assembly, thereby reducing hydrodynamic drag and overall vehicle length. Energy-absorbing ballast can be positioned within the nose cap in order to further enhance survivability.
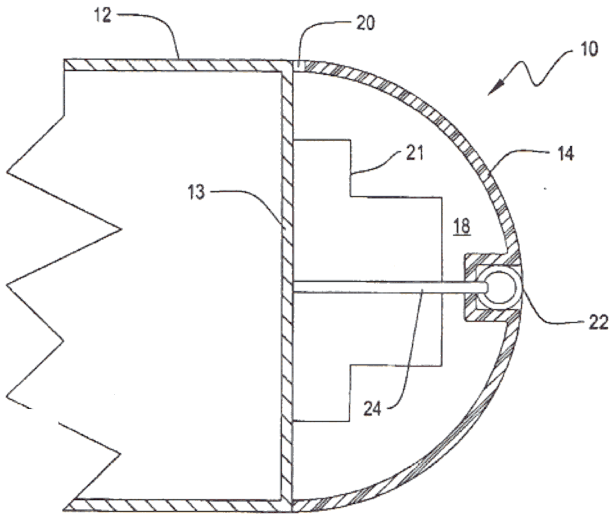
10 Claims, 1 Drawing Sheet