US006871610B1

(12) **United States Patent**
Galliano

(10) **Patent No.: US 6,871,610 B1**
(45) **Date of Patent: Mar. 29, 2005**

(54) **ASSEMBLY FOR LAUNCHING BODIES FROM AN UNDERWATER PLATFORM**

(75) Inventor: **Carlos E. Galliano**, North Kingstown, RI (US)

(73) Assignee: **The United States of America as represented by the Secretary of the Navy**, Washington, DC (US)

(*) Notice: Subject to any disclaimer, the term of this patent is extended or adjusted under 35 U.S.C. 154(b) by 33 days.

(21) Appl. No.: **10/456,163**

(22) Filed: **Jun. 6, 2003**

(51) **Int. Cl.**[7] **B63B 1/00**

(52) **U.S. Cl.** **114/238**; 114/239; 114/312; 114/316; 114/318; 114/320; 89/1.809

(58) **Field of Search** 114/238, 239, 114/312, 316, 318, 320, 20.1, 20.2, 317, 319, 321; 89/1.809

(56) **References Cited**

U.S. PATENT DOCUMENTS

249,192	A	*	11/1881	Mallory	114/20.2
2,837,971	A	*	6/1958	Wosak	89/5
2,848,970	A	*	8/1958	Gunning	114/319
3,137,203	A	*	6/1964	Brown	89/1.81
3,217,599	A	*	11/1965	Meeker	89/1.809
3,581,693	A	*	6/1971	Basset	114/328
3,857,321	A	*	12/1974	Cohen	89/1.81
3,933,109	A	*	1/1976	Boisrayon et al.	114/328
3,969,977	A	*	7/1976	Opdahl et al.	89/1.81
4,159,705	A	*	7/1979	Jacoby	124/63
4,181,152	A	*	1/1980	Nicoloff	137/637.1
4,523,538	A	*	6/1985	Hollmann et al.	114/238
5,044,253	A	*	9/1991	Moody	89/1.81
5,085,122	A	*	2/1992	Berlam et al.	89/1.81
5,099,745	A	*	3/1992	Hubbell et al.	89/1.81
5,165,360	A	*	11/1992	Moody	114/319
5,170,005	A	*	12/1992	Mabry et al.	89/1.81
5,277,144	A	*	1/1994	Moody	114/319
5,363,791	A	*	11/1994	Stallard, III	114/318
5,375,502	A	*	12/1994	Bitsakis	89/1.81
5,568,782	A	*	10/1996	Moody	114/238
5,613,460	A	*	3/1997	Stallard, III	114/312
5,666,897	A	*	9/1997	Armstrong	114/20.1
5,749,312	A	*	5/1998	Hillenbrand et al.	114/21.2
5,834,674	A	*	11/1998	Rodriguez et al.	89/1.81
5,839,463	A	*	11/1998	Blackmon et al.	137/1
6,079,347	A	*	6/2000	Lieb	114/238
6,164,179	A	*	12/2000	Buffman	89/1.81
6,220,196	B1	*	4/2001	Escarrat	114/238
6,401,645	B1	*	6/2002	Ansay et al.	114/238
6,679,454	B2	*	1/2004	Olsen et al.	244/137.1
6,701,819	B1	*	3/2004	Williams et al.	89/1.81

* cited by examiner

Primary Examiner—Peter M. Poon
Assistant Examiner—John Richardson
(74) *Attorney, Agent, or Firm*—James M. Kasischke; Michael F. Oglo; Jean-Peal A. Nasser

(57) **ABSTRACT**

An assembly for launching bodies from an underwater platform having a pressure hull, and an outer hull subject to free flooding. The assembly includes a module having a proximal end outboard of the pressure hull portion of the platform, a distal end disposed proximate and in alignment with a launch opening in the outer hull portion, and a chamber in the module extending from the distal end of the module to proximate the proximal end of the module, the module chamber being adapted to receive and retain one of the bodies. Support structure on the platform retains the module. A pump on the platform is in communication with water outside the pressure hull, and an impulse tank on the platform is in communication with the pump. A manifold is in communication with the impulse tank for directing outflow of water from the impulse tank to the chamber to eject the body from the chamber.
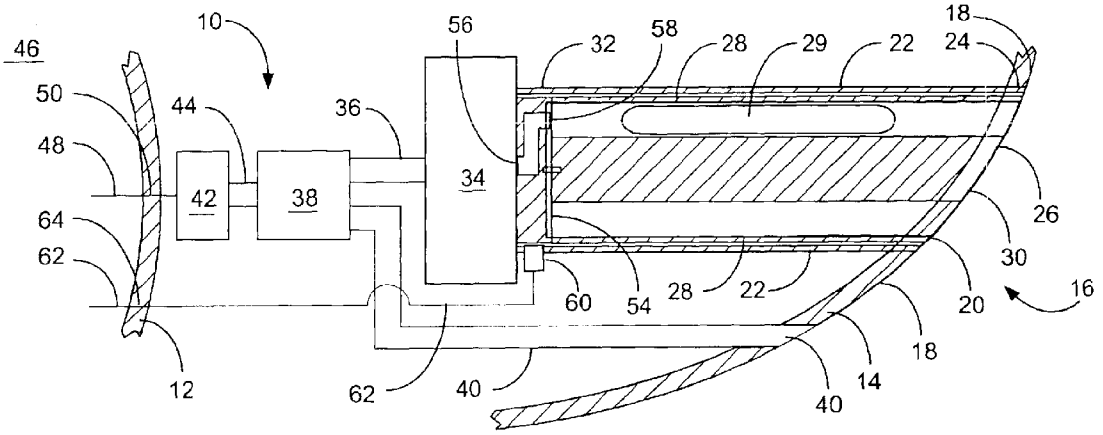
14 Claims, 1 Drawing Sheet