US006984899B1

(12) **United States Patent**
Rice

(10) **Patent No.: US 6,984,899 B1**
(45) **Date of Patent: Jan. 10, 2006**

(54) **WIND DAM ELECTRIC GENERATOR AND METHOD**

(75) Inventor: **Pahl W. Rice**, Jewett City, CT (US)

(73) Assignee: **The United States of America as represented by the Secretary of the Navy**, Washington, DC (US)

(*) Notice: Subject to any disclaimer, the term of this patent is extended or adjusted under 35 U.S.C. 154(b) by 129 days.

(21) Appl. No.: **10/789,484**

(22) Filed: **Mar. 1, 2004**

(51) **Int. Cl.**
F03D 3/04 (2006.01)

(52) **U.S. Cl.** ..... **290/44**; 290/55; 415/4.2; 416/197 A

(58) **Field of Classification Search** ..... 290/43, 290/44, 54, 55; 415/4.1, 4.2; 416/197 A
See application file for complete search history.

(56) **References Cited**

U.S. PATENT DOCUMENTS

3,942,909 A * 3/1976 Yengst ..... 416/132 B
3,970,409 A * 7/1976 Luchuk 416/145
4,031,405 A * 6/1977 Asperger 290/55
4,174,923 A * 11/1979 Williamson 415/211.1
4,295,783 A * 10/1981 Lebost 415/4.4
4,474,529 A * 10/1984 Kinsey 415/4.2
4,551,631 A * 11/1985 Trigilio 290/55
4,585,950 A * 4/1986 Lund 290/44
4,600,360 A * 7/1986 Quarterman 415/148
4,606,697 A * 8/1986 Appel 415/4.4
4,834,610 A * 5/1989 Bond, III 415/53.3
5,009,569 A * 4/1991 Hector et al. 415/4.1
5,057,696 A * 10/1991 Thomas 290/44
5,336,933 A * 8/1994 Ernster 290/55
5,391,926 A * 2/1995 Staley et al. 290/55
5,478,197 A * 12/1995 Schatz et al. 415/2.1
5,503,530 A * 4/1996 Walters ..... 416/197 A
5,518,362 A * 5/1996 Kivilammi 415/2.1
5,852,331 A * 12/1998 Giorgini 290/55
6,239,507 B1 * 5/2001 Douthit 290/55
6,242,818 B1 * 6/2001 Smedley 290/44
6,249,059 B1 * 6/2001 Hosoda 290/55
6,448,669 B1 * 9/2002 Elder 290/54

* cited by examiner

Primary Examiner—Nicholas Ponomarenko
(74) *Attorney, Agent, or Firm*—James M. Kasischke; Michael P. Stanley; Jean-Paul A. Nasser

(57) **ABSTRACT**

A vertical axis windmill is provided wherein the amount of wind directed to blades in the power producing part of rotation and the mechanical load of multiple generators is controlled by a feedback control to maintain a relatively constant rotational frequency of the shaft of the windmill. In a preferred embodiment, two wind foils extend radially outwardly from the blades to thereby provide a scoop capable of pulling in more air than would normally be received by the blades. The wind foils then direct the wind flow to the power producing part of rotation of the blades for maximum power output, when necessary. The wind foils can close to control the wind flow to the blades. The generating capacity of a plurality of generators is also controlled in response to shaft rotation to maintain substantially constant shaft rotation.
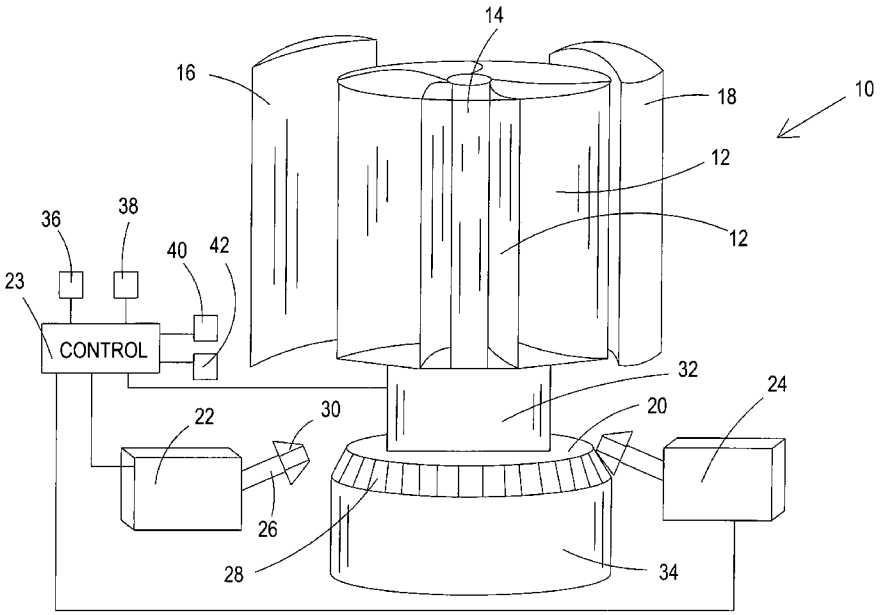
15 Claims, 2 Drawing Sheets