US006611824B1

(12) **United States Patent**
Ganesh et al.

(10) **Patent No.: US 6,611,824 B1**
(45) **Date of Patent: Aug. 26, 2003**

(54) **SYSTEM FOR BEARING-ONLY CONTACT STATE ESTIMATION USING RECURRENT NEURAL NETWORKS**

(75) Inventors: **Chidambar Ganesh**, Bristol, RI (US); **Kai F. Gong**, Pawtucket, RI (US); **Sherry E. Hammel**, Little Compton, RI (US)

(73) Assignee: **The United States of America as represented by the Secretary of the Navy**, Washington, DC (US)

(*) Notice: Subject to any disclaimer, the term of this patent is extended or adjusted under 35 U.S.C. 154(b) by 0 days.

(21) Appl. No.: **08/792,240**

(22) Filed: **Jan. 31, 1997**

(51) **Int. Cl.**[7] G06N 3/02

(52) **U.S. Cl.** **706/22**; 706/15

(58) **Field of Search** 395/21; 706/25, 706/24, 22, 20, 10; 700/90; 342/96, 162

(56) **References Cited**

U.S. PATENT DOCUMENTS

5,276,770	A	*	1/1994	Castelaz	706/25
5,307,289	A	*	4/1994	Harris	700/90
5,345,539	A	*	9/1994	Webb	706/24
5,488,589	A	*	1/1996	DeAngelis	367/131
5,537,511	A	*	7/1996	DeAngelis et al.	706/24
5,548,683	A	*	8/1996	Engel et al.	706/20
5,657,251	A	*	8/1997	Fiala	342/162
5,884,294	A	*	3/1999	Kadar et al.	706/10
5,959,574	A	*	9/1999	Poore, Jr.	342/96

OTHER PUBLICATIONS

Chaudhuri, S.P.; Khanh Luong; Adaptive all-source data fusion system development, Military Communications Conference, 1998. MILCOM 98. Proceedings., IEEE, vol.: 3, Oct. 18–21, 1998, pp.: 924–928 vol. 3.*

Chin-Der Wann; Thomopoulos, S.C.A.; Unsupervised Learning Neural Networks With Applications To Data Fusion, American Control Conference, 1994, vol.: 2 , Jun. 29–Jul. 1, 1994, pp.: 1361–1365.*

Whittington, G.; Spracklen, C.T.; The application of neural networks to tactical and sensor data fusion problems, Artificial Neural Networks, 1989., First IEE International Conference on (Conf. Publ. No. 313) , Oct. 16–18, 1989, pp.: 342–345.*

Sundareshan, M.K.; Amoozegar, F.; Data fusion and nonlinear tracking filter implementation using multilayer networks, Neural Networks, 1995. Proceedings., IEEE International Conference on, vol.: 2, Nov./Dec. 1995, pp.: 871–876 vol. 2.*

(List continued on next page.)

Primary Examiner—Wilbert L. Starks, Jr.
(74) *Attorney, Agent, or Firm*—James M. Kasischke; Michael F. Oglo; Jean-Paul A. Nasser

(57) **ABSTRACT**

A system for bearings-only contact state estimation in response to target bearing and ownship speed and course information provided for a plurality of observation legs at successive points in time, includes a plurality of neural networks and a data fusion circuit. Each of the neural networks generates range-normalized parameter estimate information for one of the observation legs in response to target bearing and ownship speed and course information for an associated one of the observation legs, provided thereto at each point in time and information generated for the previous point in time. The data fusion system receives the range-normalized parameter estimate information from the neural networks and generates the contact state estimate in response thereto.
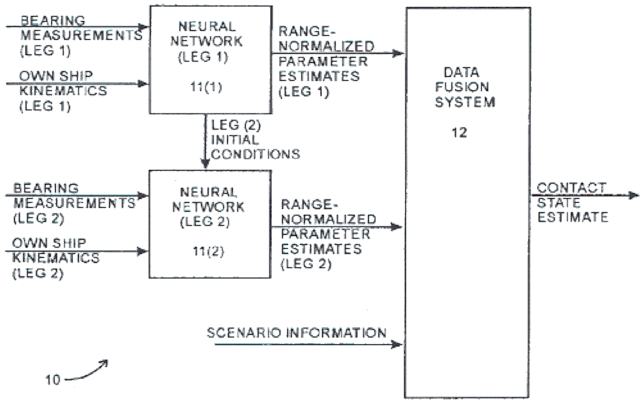
6 Claims, 3 Drawing Sheets