US006870508B1

(12) **United States Patent**
Rivera

(10) **Patent No.: US 6,870,508 B1**
(45) **Date of Patent: Mar. 22, 2005**

(54) **ANTENNA FOR DEPLOYMENT FROM UNDERWATER LOCATION**

(75) Inventor: **David F. Rivera**, Westerly, RI (US)

(73) Assignee: **The United States of America as represented by the Secretary of the Navy**, Washington, DC (US)

(*) Notice: Subject to any disclaimer, the term of this patent is extended or adjusted under 35 U.S.C. 154(b) by 0 days.

(21) Appl. No.: **10/463,907**

(22) Filed: **Jun. 16, 2003**

(51) **Int. Cl.**[7] **H01Q 1/34**; H01Q 13/10
(52) **U.S. Cl.** **343/709**; 343/767
(58) **Field of Search** 343/709, 767, 343/770, 792.5, 880, 915; 342/10

(56) **References Cited**

U.S. PATENT DOCUMENTS

2,067,337 A 1/1937 Polatzek
2,818,562 A 12/1957 Carter
3,210,767 A * 10/1965 Isbell 343/792.5
3,626,418 A 12/1971 Berryman, Jr.
3,788,255 A 1/1974 Tennyson
3,972,047 A 7/1976 Lombardi
3,999,185 A 12/1976 Polgar, Jr.
5,132,696 A 7/1992 Cobb
5,790,082 A * 8/1998 Podger 343/792.5
5,933,117 A 8/1999 Gerhard

* cited by examiner

Primary Examiner—Michael C. Wimer
(74) *Attorney, Agent, or Firm*—James M. Kasischke; Jean-Paul A. Nasser; Michael F. Oglo

(57) **ABSTRACT**

A slotted antenna comprises a plurality of loop structures and interconnecting conductors that define a slot. The antennas can operate in a single band or over multiple bands. Flexible or inflatable substrates enable easy storage aboard an underwater craft and facilitate deployment and towing behind an underwater craft with minimal chances of detection.
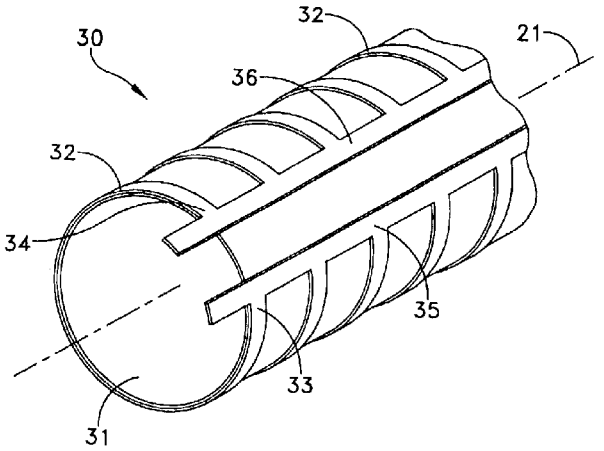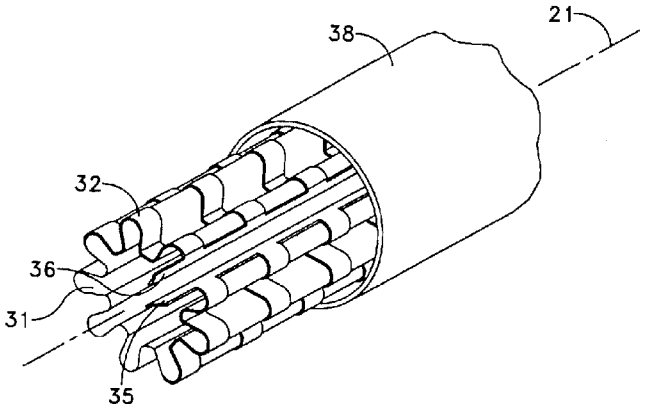
18 Claims, 15 Drawing Sheets