US006732788B2

(12) **United States Patent**
Keith et al.

(10) **Patent No.: US 6,732,788 B2**
(45) **Date of Patent: May 11, 2004**

(54) **VORTICITY GENERATOR FOR IMPROVING HEAT EXCHANGER EFFICIENCY**

(75) Inventors: **William L. Keith**, Ashaway, RI (US); **Kimberly M. Cipolla**, Portsmouth, RI (US)

(73) Assignee: **The United States of America as represented by the Secretary of the Navy**, Washington, DC (US)

(*) Notice: Subject to any disclaimer, the term of this patent is extended or adjusted under 35 U.S.C. 154(b) by 20 days.

(21) Appl. No.: **10/214,530**

(22) Filed: **Aug. 8, 2002**

(65) **Prior Publication Data**

US 2004/0026069 A1 Feb. 12, 2004

(51) **Int. Cl.**[7] **F28F 13/12**

(52) **U.S. Cl.** **165/109.1**; 165/181; 138/38; 29/890.053

(58) **Field of Search** 165/109.1, 177, 165/178, 181; 138/38; 29/890.053

(56) **References Cited**

U.S. PATENT DOCUMENTS

3,595,299	A	*	7/1971	Weishaupt et al. .	159/28.5
4,090,559	A	*	5/1978	Megerlin	165/179
4,589,481	A	*	5/1986	Mansson	165/172
4,798,241	A	*	1/1989	Jarrett et al.	165/109.1
4,881,596	A	*	11/1989	Bergmann et al.	165/174
5,497,824	A	*	3/1996	Rouf	165/184
6,018,963	A	*	2/2000	Itoh et al.	62/527
6,390,183	B2	*	5/2002	Aoyagi et al.	165/146
2002/0139517	A1	*	10/2002	Choi et al.	165/104.26
2002/0195226	A1	*	12/2002	Visser	165/41

FOREIGN PATENT DOCUMENTS

GB	2044430 A	*	10/1980	138/38

* cited by examiner

Primary Examiner—Terrell McKinnon
(74) *Attorney, Agent, or Firm*—James M. Kasischke; Michael F. Oglo; Jean-Paul A. Nasser

(57) **ABSTRACT**

A heat exchange tube includes a tubular conduit for flowing a working fluid therethrough and for conducting heat between the working fluid and a thermal field proximate the tube, and a wire extending axially through the tubular conduit and spaced from an inside surface of the tubular conduit. The invention also provides a method for increasing heat transfer about a tubular conduit by positioning a wire in the conduit.
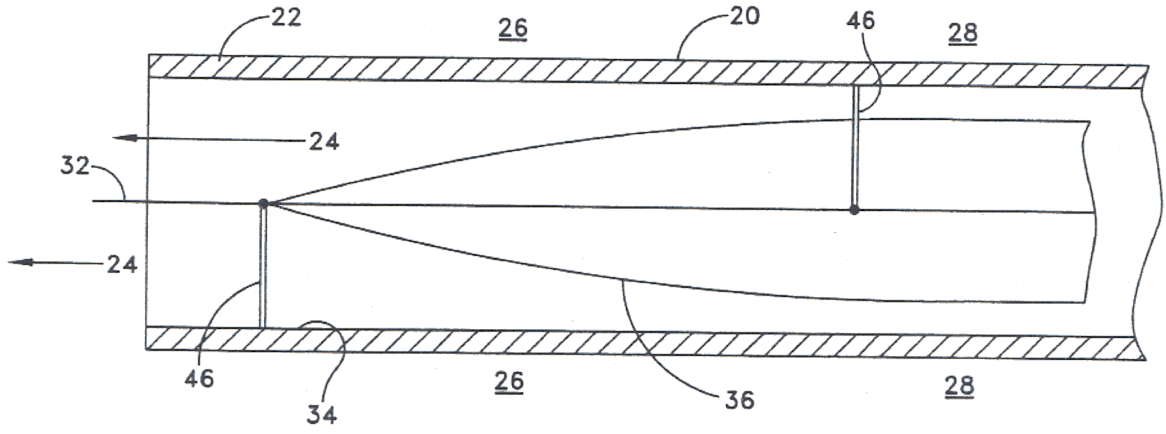
17 Claims, 3 Drawing Sheets