US006466719B2

(12) **United States Patent**
Stottlemyer et al.

(10) **Patent No.: US 6,466,719 B2**
(45) **Date of Patent: Oct. 15, 2002**

(54) **OPTICAL TEMPERATURE SENSING ARRANGEMENT FOR TOWED CABLE**

(75) Inventors: Thomas R. Stottlemyer, Mystic; Peter E. Seaman, Niantic, both of CT (US)

(73) Assignee: The United States of America as represented by the Secretary of the Navy, Washington, DC (US)

(*) Notice: Subject to any disclaimer, the term of this patent is extended or adjusted under 35 U.S.C. 154(b) by 0 days.

(21) Appl. No.: 09/754,384

(22) Filed: Jan. 4, 2001

(65) **Prior Publication Data**

US 2002/0085819 A1 Jul. 4, 2002

(51) **Int. Cl.**[7] G02B 6/44
(52) **U.S. Cl.** 385/104
(58) **Field of Search** 385/100, 101, 385/104, 105, 108, 110, 111, 114, 12

(56) **References Cited**

U.S. PATENT DOCUMENTS

4,227,770 A * 10/1980 Gunn 385/103
4,389,088 A * 6/1983 Trezequet 385/111
4,744,631 A * 5/1988 Eichenbaum et al. 385/114
5,468,913 A * 11/1995 Seaman et al. 174/102
5,638,478 A * 6/1997 Iwakura et al. 385/111
5,715,343 A * 2/1998 Anelli et al. 385/100
6,047,094 A * 4/2000 Kalamkarov et al. .. 385/12
6,178,277 B1 * 1/2001 Ravela et al. 385/109

* cited by examiner

Primary Examiner—Tulsidas Patel
Assistant Examiner—Thanh-Tam Le
(74) *Attorney, Agent, or Firm*—Michael J. McGowan; Michael F. Oglo; James M. Kasischke

(57) **ABSTRACT**

A system for sensing water temperature includes a tow cable with an exterior surface having at least one helical groove formed therein and a metal tube lying in each helical groove. At least one optical temperature sensing element is provided in each metal tube. A thermally-conducting material fills each metal tube and surrounds each optical temperature sensing element contained therein. An outer jacket layer is formed over the tow cable and metal tube.
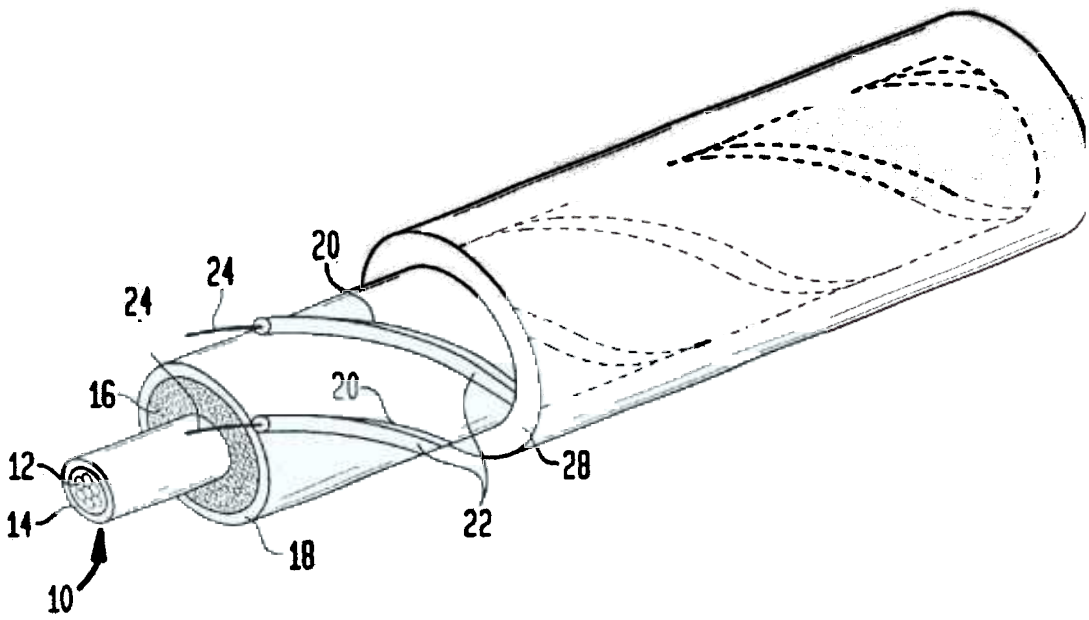
21 Claims, 1 Drawing Sheet